NW101 P GOLDSMITH

http://www.tiptiptap.ee/en/products/series-amazon-zodiac-nature-world/pirate-world/goldsmith-nw101-p

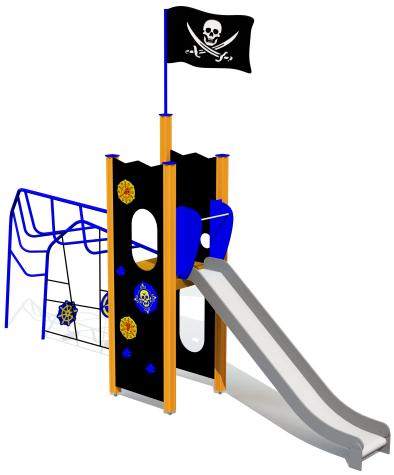

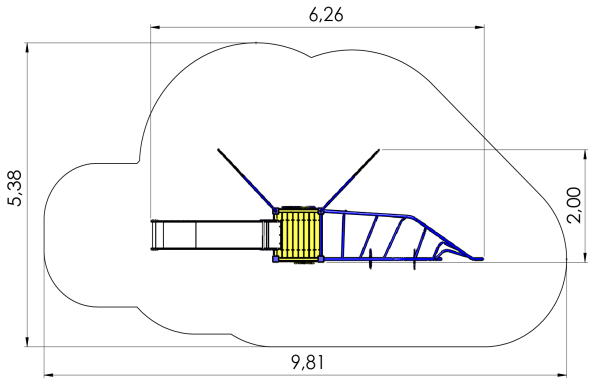

Technical information:

Width of structure: 2m
Length of structure: 6.26m
Height of structure: 4.73m
Max. fall height: 2.26m
Recommended age of users: 4+
For simultaneous use by several children: 4-6

Product consists of:
Ground fixings: The product's painted profile posts made of laminated timber are concreted into the ground using hot-galvanized metal tubular fittings.
Safety area: Yes
View materials